D Series → Model i-NLS-Nxxxxx

A low-profile indoor system that offers a flexible duct connection pattern in the smallest possible footprint. Construction is aluminum space frame with corrosion-resistant hardware and double-walled coated aluminum panels, whose closed-cell foam insulation results in a 6.3 R-value.

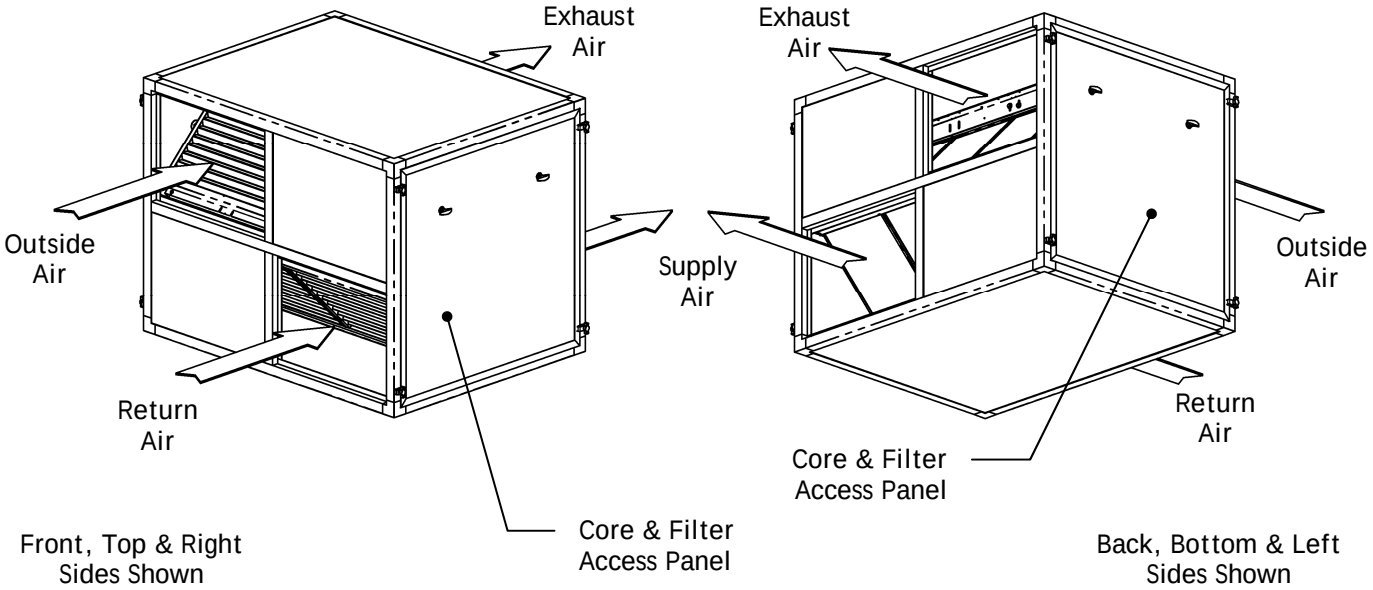

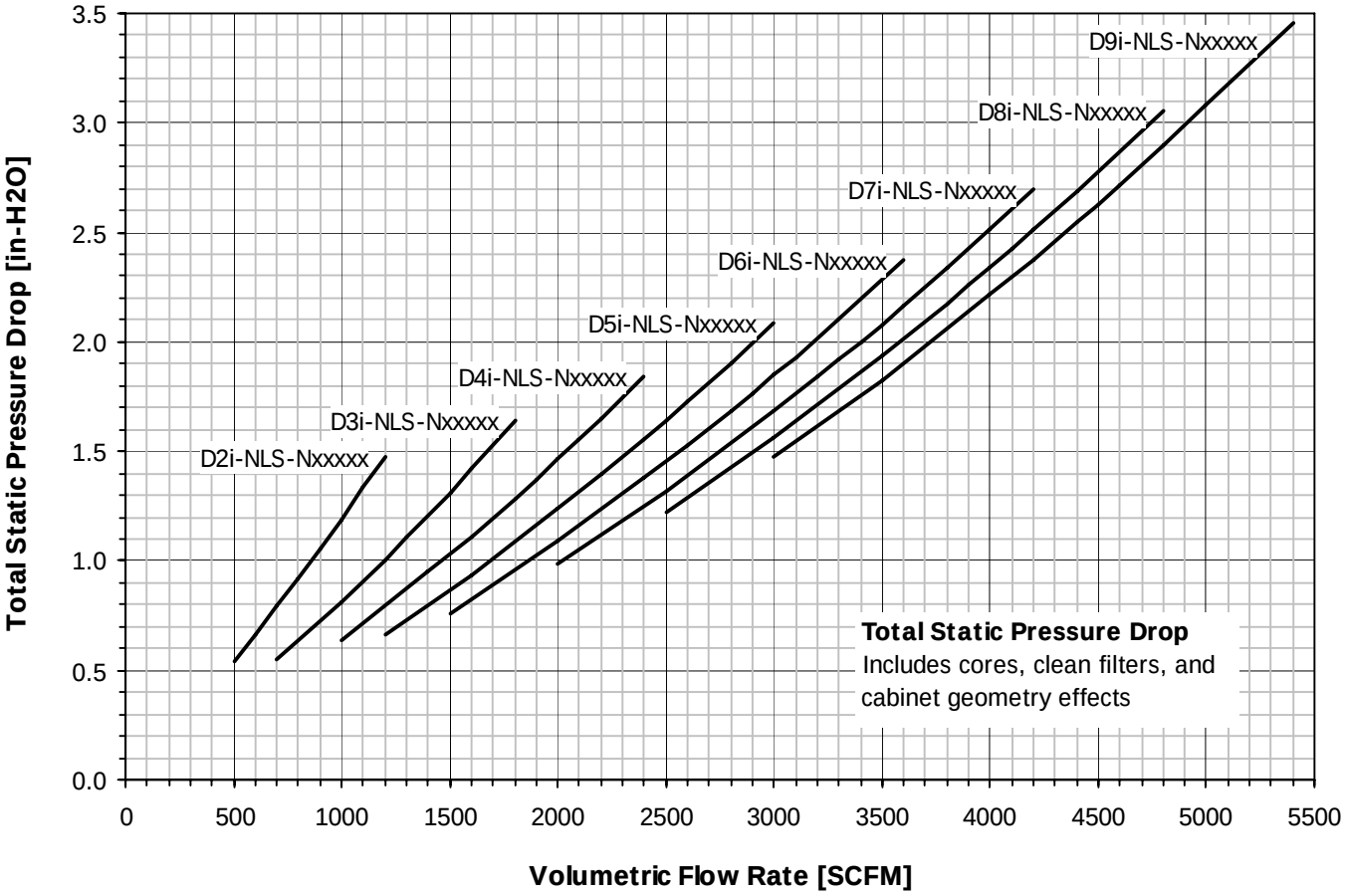

# CORES	MODEL #	A	B	C	WEIGHT [LB]
2	D2i - NLS	29.18	26.72	11	181
3	D3i - NLS	41.52	39.06	17.17	242
4	D4i - NLS	53.87	51.41	23.34	303
5	D5i - NLS	66.21	63.75	29.51	364
6	D6i - NLS	78.55	76.09	35.68	425
7	D7i - NLS	90.9	88.44	41.86	486
8	D8i - NLS	103.24	100.78	48.03	547
9	D9i - NLS	115.59	113.13	54.2	608

NOTES:

SYSTEM IS INTENDED FOR INDOOR USE

D4i-NLS-NSHHHH MODEL PICTURED

32 FLOW CONFIGURATIONS AVAILABLE FOR PRE-ORDER (SEE ORDER INFORMATION SHEETS FOR DETAILS)

DIFFERENT FLOW CONFIGURATIONS CAN CHANGE PLACEMENT OF OPENINGS AND STRUCTURAL DETAILS, BUT DIMENSIONS ARE VALID THROUGHOUT MODEL LINE

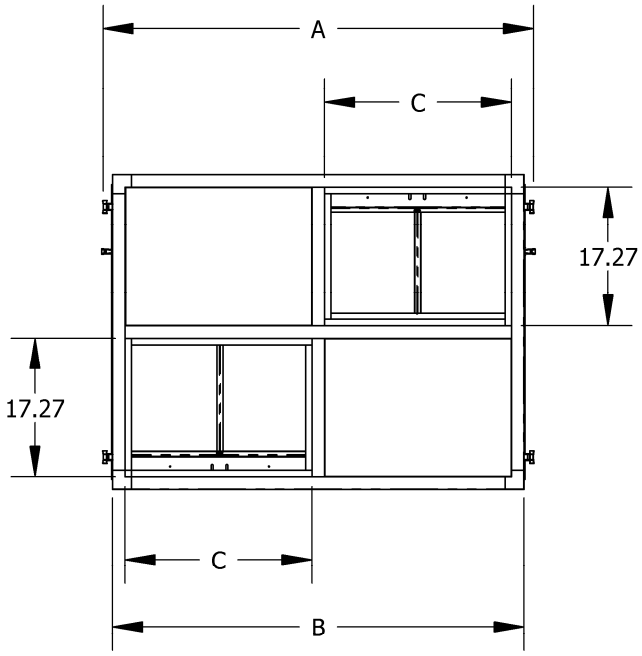

BACK VIEW

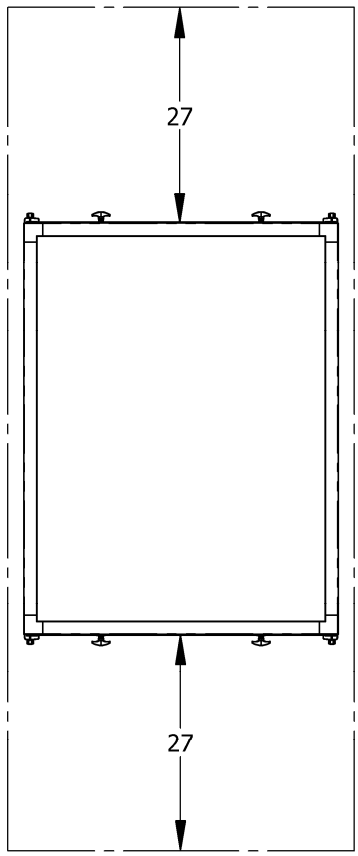

TOP VIEW (RECOMMENDED SERVICE AREA SHOWN)

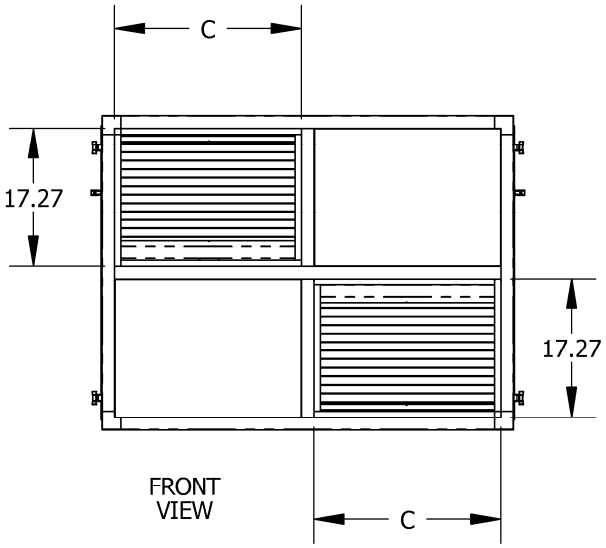

FRONT VIEW

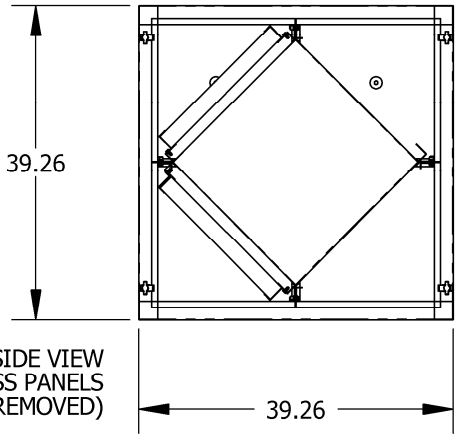

RIGHT SIDE VIEW (ACCESS PANELS REMOVED)

SIZE	REV.	MODIFIED		MODEL
A	1	11/10/2006	**INDOOR LOW-PROFILE UNIT - STANDARD DUCTS**	Dxi-NLS-Nxxxxx