D Series → Model i-NLE-Nxxxxx

A low-profile indoor system with extended duct connection openings in the smallest possible footprint. Construction is aluminum space frame with corrosion-resistant hardware and double-walled coated aluminum panels, whose closed-cell foam insulation results in a 6.3 R-value.

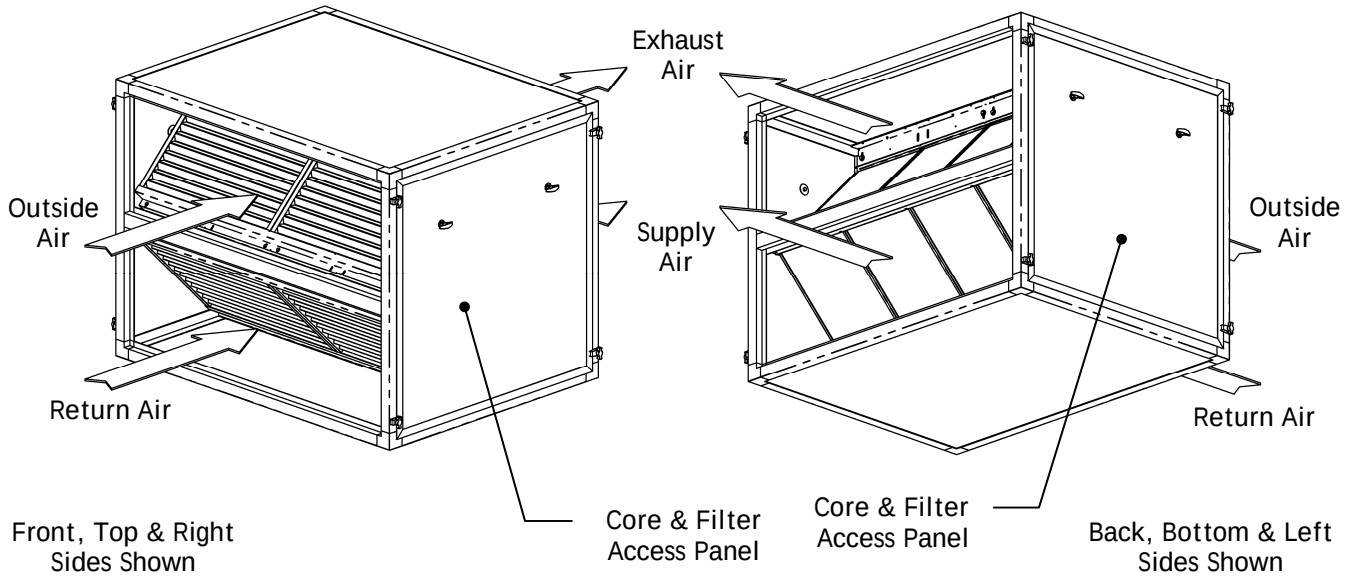

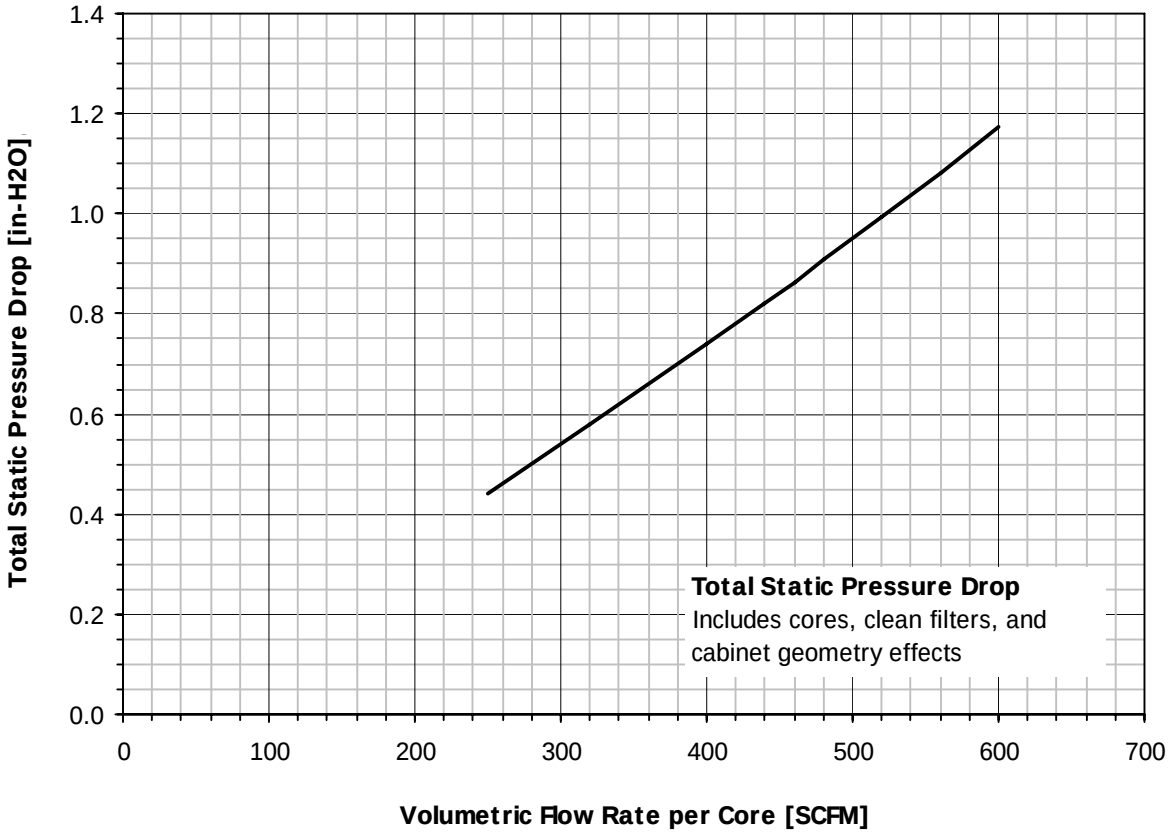

# CORES	MODEL #	A	B	C	WEIGHT [LB]
2	D2i - NLE	29.18	26.72	23.57	171
3	D3i - NLE	41.52	39.06	35.91	227
4	D4i - NLE	53.87	51.41	48.26	283
5	D5i - NLE	66.21	63.75	60.6	339
6	D6i - NLE	78.55	76.09	72.94	395
7	D7i - NLE	90.9	88.44	85.29	451
8	D8i - NLE	103.24	100.78	97.63	507
9	D9i - NLE	115.59	113.13	109.98	563

NOTES:

SYSTEM IS INTENDED FOR INDOOR USE

D4i-NLE-NSHHHH MODEL PICTURED

32 FLOW CONFIGURATIONS AVAILABLE FOR PRE-ORDER (SEE ORDER INFORMATION SHEETS FOR DETAILS)

DIFFERENT FLOW CONFIGURATIONS CAN CHANGE PLACEMENT OF OPENINGS AND STRUCTURAL DETAILS, BUT DIMENSIONS ARE VALID THROUGHOUT MODEL LINE

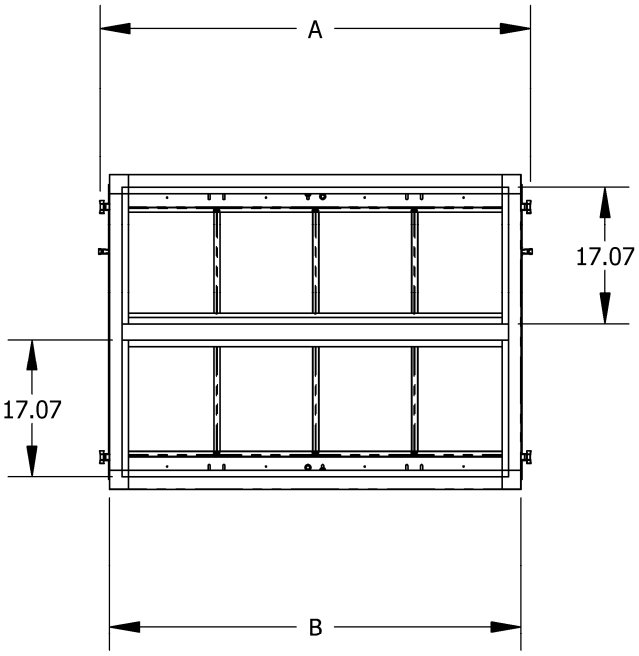

BACK VIEW

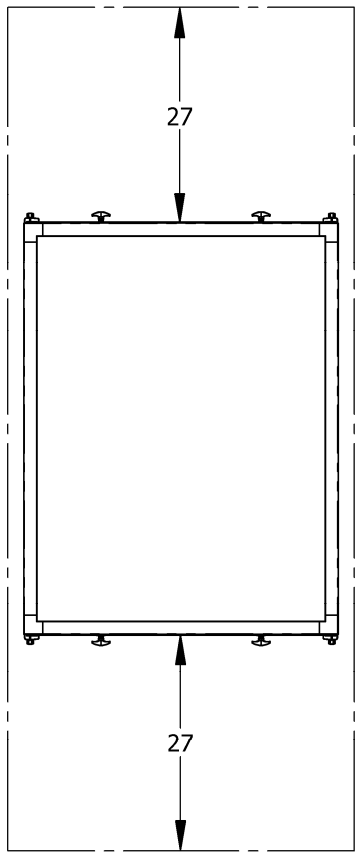

TOP VIEW (RECOMMENDED SERVICE AREA SHOWN)

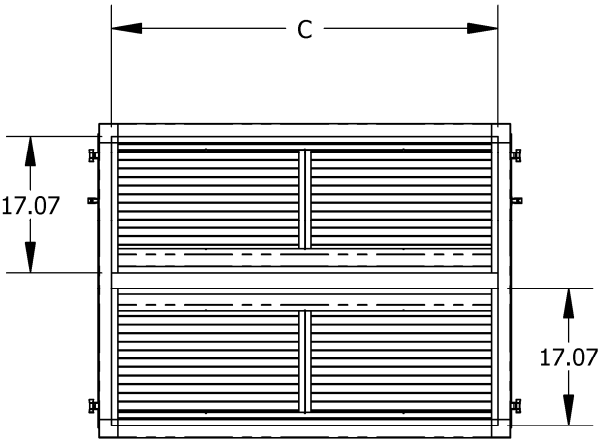

FRONT VIEW

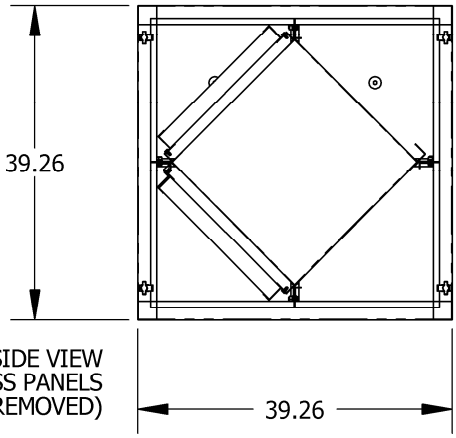

RIGHT SIDE VIEW (ACCESS PANELS REMOVED)

SIZE	REV.	MODIFIED		MODEL
A	1	11/10/2006	**INDOOR LOW-PROFILE UNIT - EXTENDED DUCTS**	Dxi-NLE-Nxxxxx